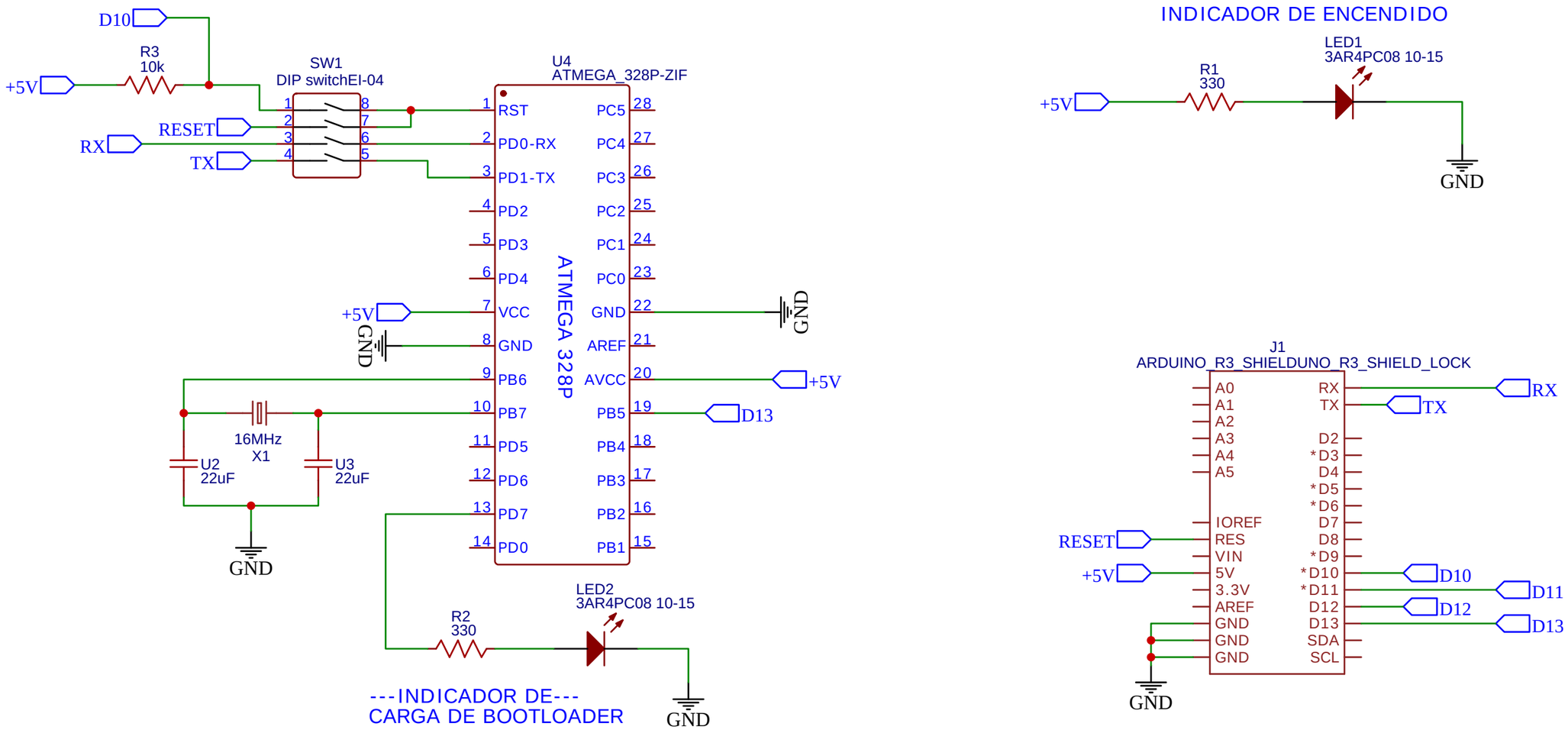

TITLE: BOOTLOADER PCB		REV: 1.0
EasyEDA	Company: TECNOINGENIA	Sheet: 1/1
	Date: 2019-10-08 Drawn By: Israel Barreras	